PLASTITALIA™ S.p.A.
high performance fittings

TECHNICAL DATASHEET

?????????????? ???????

??????? ?????????????? ??? ?????? ??? ????????

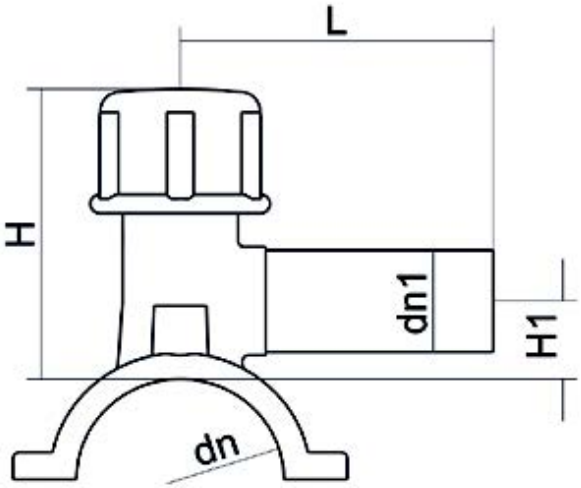

PRODUCT DETAILS	
ITEM CODE	CPCP110040C
d_n	110 - 40
SDR DESIGN	11

GEOMETRIC CHARACTERISTICS	
d_n	110
d_n1	40
H [mm]	176
H1 [mm]	105
L [mm]	165
Mass [kg]	1.09

*The pictures are for illustrative purposes only. the product may differ in color and / or some of its parts.

PLASTITALIA SPA reserves the right to revise this specification, while maintaining compliance with the requirements of the product without prior notice. Tolerance on diameters and thickness according to the standards unless otherwise specified. Tolerance: ± 5%

Via Ferrara - 98061 - Brolo (ME) - Italy tel. +39 0941 536311 fax +39 0941 561476 info@plastitaliaspa.com
www.plastitaliaspa.com